Planning Advisory Notice

ANSI/TIA 1019–A-2012 "Standard for Installation, Alteration and Maintenance of Antenna Supporting Structures and Antennas" and the Tower Owner

The TIA 1019-A Standard has many applied uses. In this month's PAN we will focus on why tower owners, engineers and contractors should apply this standard when modifying a tower structure. As we all know there are a large number of tower structures that are in need of structural modification due to an increase in loading. In the past when a tower required modification a common means by the contractor, owner and the engineer to plan or access the risk did not exist. TIA-1019-A is the natural evolution from the original TIA-1019 "Gin Pole Standard." While the Gin Pole Standard was focused on one aspect of the construction of communications structures, TIA-1019-A (the 1019 Standard) provides a more complete approach to the management, modification, and construction of a communication structure.
Using TIA-1019 will reduce risk; create consistent approaches to the construction and management of the construction site; a means of communicating with the structure engineer; and a means of evaluating short term construction loads and risks.

The standard defines the roles of the construction personnel intimately involved in the erection process based upon the type of work that will be done.

Table 2-1: Construction Classifications

Class	Description	Minimum Level of Responsibility
I	The scope of work does not affect the integrity of the structure and the proposed rigging loads are minor in comparison to the strength of the structure, but not exceeding rigging forces greater than 650 lbs.	Competent Rigger
II	The scope of work involves the removal or the addition of appurtenances, mounts, platforms, etc. that involve minor rigging loads in comparison to the strength of the structure, but not exceeding rigging forces greater than 1,000 lbs.	Competent Rigger
III	Rigging plans that involve work outside the scope of Class I, II or IV construction.	Qualified Person
IV	The scope of work involves custom or infrequent construction methods, removal of structural members or unique appurtenances, special engineered lifts, and unique situations.	Qualified Person with Qualified Engineer

When performing a modification to a tower the engineer shall devise a plan to modify the structure and the contractor with the use of the standard can then define the methods, i.e. a rigging plan, that will be used to complete the modifications. This rigging plan can now be reviewed by a qualified person or a qualified engineer depending

Initial Pan advisory group members are Dave Anthony (President Shenandoah Tower Service, Ltd.), John Erichsen (Principal EET PE, Chairman TIA Committe TR14), Scott Kisting (MUTI Vice President), Stephanie Brewer (MUTI CC), Dale Heath (CommScope Product Line Manager), and Todd Schlekeway (NATE Executive Director).

on the type of work involved, and the engineer and contractor have a defined document format from which they can clearly communicate with each other. Please see table 2-1 for the minimum levels of responsibility as defined by the standard.

The use of the rigging plan also allows the engineer and construction personnel to ascertain how the structure will react to the erection/modification process, sudden storms, and the risks/interplay between completely installing all of the stipulated structural modifications versus the demand to complete the antenna/mount and line installation. As an example, consider a project in which the modification materials will not be immediately available yet the RF equipment must be installed to accommodate a 911 system. TIA-1019 allows a qualified engineer to reduce the design wind loads to a shorter duration period allowing the installation of antenna, mount and line components as the modification products are being produced and/or installed, as part of the modification/construction process.

The 1019 standard stipulates the following as factors that reduces the TIA-222-G wind speeds based upon the construction period under consideration. The reduction factors are used by the engineering professional to complete a rigorous analysis to ascertain the structures capacity.

Reduction factors shall not be less than the following:

- **0.50 for one work day or less**
- **0.60 for less than 24 hours**
- **0.67 for 24 hours to less than 1 week**
- **0.75 for 1 week to less than 6 weeks**
- **0.80 for 6 weeks to 6 months**
- **for greater than 6 months.**

Obviously, any change in the construction sequence must be reviewed by a qualified engineer and monitored to confirm the use of the noted reduction factors are not misused, or misapplied to prolong the prescribed work. For instance, it is completely reasonable to allow the RF equipment to be installed prior to the tower modifications if the tower will support the proposed antenna loading using the 1 week to 6 week duration period, the structure has been reviewed by a qualified professional engineer using the reduced duration wind loads and the tower modifications will be completely installed prior to the end of the 6 week period. It is not acceptable to use consecutive 6 week periods to postpone the tower modifications. While this creates a more complex construction process, it will provide more flexibility in situations that are not ideal. For the owner and the contractor this standard can be used to apply the same short duration logic to ascertain the engineering suitability of temporary structure (or jigs) used to reconstruct communications facilities after natural and man-made disasters or during unique short term events. An example of this would be the

continued on next page

replacement of structural members to strengthen the tower such as new diagonals. In the past the owner, contractor and engineer had no real means to communicate how this work would occur and now with the use of the standard this means existing which creates the highest likelihood of success without adversely affecting the structure.

Prior to the publication of TIA-1019-A, engineering interaction between the construction crew and the engineer was rare or non-existent except during the construction of very large and complex structures. TIA-1019-A allows the entire project regardless of the size to be managed proactively and from an engineering perspective. It allows planning to become the norm. And if properly used, it allows the construction professional to create a construction plan (rigging plan) once that can be used repetitively for the same actions, e.g. antenna placement, managing risk and improving safety.

The diagram on the facing page depicts one possible approach that can be used during the replacement of key structural members. Temporary supports such as this are used to avoid unsafe conditions that may threaten the stability of the structure. The 1019 Standard establishes a prescribed means that an engineer can use to compute defined loads that are used to configure the temporary support structure. A secondary benefit discovered by those that have applied the 1019 Standard has been a reduction in construction costs associated with improper installation techniques. Planning ahead a lift or installation of new structural members has eliminated false starts and improves the overall process, speeding up the installation and reducing risks and the construction costs.

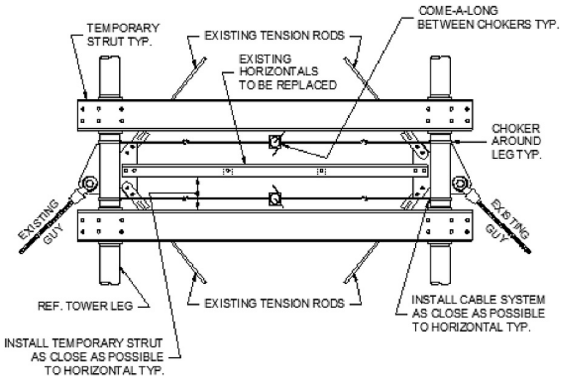

This diagram depicts one possible approach that can be used during the replacement of key structural members.

This is a very brief description of some of the many benefits TIA-1019-A offers the owner, contractor and engineer. We strongly urge the owner, construction professional, and design engineer to become familiar with the 1019 Standard and the benefits it offers to improve safety, reduce risk and improve the planning and construction process. It will increase the quality of the installation work. ■